POSTAL Study Package 2019

Electronics Engineering

Conventional Practice Sets

Basic Electrical Engineering

Contents

Sl.	Topic	Page No.
1.	DC Machines	2
2.	Transformers	15
3.	Induction Motors	30
4.	Synchronous Machines	33

MADE EASY Publications

Note: This book contains copyright subject matter to MADE EASY Publications, New Delhi. No part of this book may be reproduced, stored in a retrieval system or transmitted in any form or by any means. Violators are liable to be legally prosecuted.

1 CHAPTER
DC Machines

Q.1 A shunt generator delivers 450 A at 230 V and the resistance of the shunt field and armature are 50 Ω and 0.03 Ω respectively. Calculate the generated e.m.f.

Solution:

Generator circuit shown in figure,

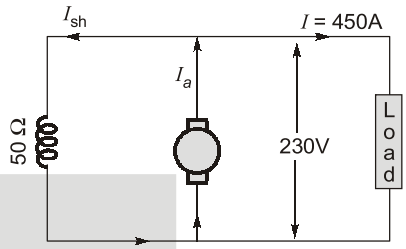

$$I_{sh} = \frac{230}{50} = 4.6 \text{ A}$$

Load current, $I = 450$ A

$\therefore$ Armature current $I_a = I + I_{sh}$

$= 450 + 4.6 = 454.6$ A

Armature voltage drop, $I_aR_a = 454.6 \times 0.03 = 13.6$ V

Now E_g = terminal voltage + armature drop

$= V + I_aR_a$

$\therefore$ e.m.f. generated in the armature

$E_g = 230 + 13.6 = 243.6$ V

Q.2 A long-shunt compound generator delivers a load current of 50 A at 500 V and has armature, series field and shunt field resistances of 0.05 Ω, 0.03 Ω and 250 Ω respectively. Calculate the generated voltage and the armature current. Allow 1 V per brush for contact drop.

Solution:

Generator circuit is shown in figure.

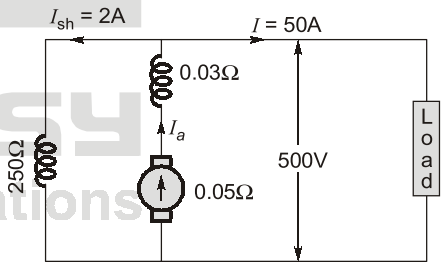

$$I_{sh} = \frac{500}{250} = 2 \text{ A}$$

Current through armature and series winding is 50 + 2 = 52 A

Series field winding drop = $52 \times 0.03 = 1.56$ V

Armature voltage drop $I_aR_a = 52 \times 0.05 = 2.6$ V

Drop at brushes = $2 \times 1 = 2$ V

Now, $E_g = V + I_aR_a$ + series drop + brush drop

$= 500 + 2.6 + 1.56 + 2 = 506.16$ V

Q.3 A short-shunt compound generator delivers a load current of 30 A at 220 V, and has armature, series-field and shunt-field resistances of 0.05 Ω, 0.30 Ω and 200 Ω respectively. Calculate the induced e.m.f. and the armature current. Allow 1.0 V per brush for contact drop.

Solution:

Generator circuit diagram is shown in figure.

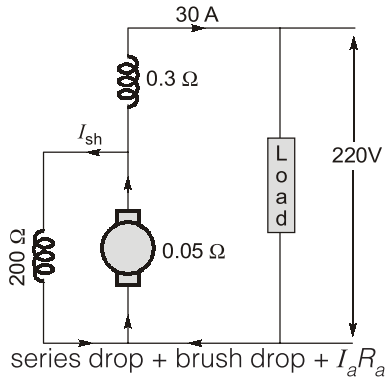

Voltage drop in series winding = $30 \times 0.3 = 9$ V

Voltage across shunt winding = $220 + 9 = 229$ V

$$I_{sh} = \frac{229}{200} = 1.145\,\text{A}$$

$I_a = 30 + 1.145 = 31.145$ A

$I_aR_a = 31.145 \times 0.05 = 1.56$ V

Brush drop = $2 \times 1 = 2$ V

$E_g = V +$

$= 220 + 9 + 2 + 1.56 = 232.56$ V

Q.4 **The following information is given for a 300 kW, 600-V, long-shunt compound generator: Shunt field resistance = 75 Ω, armature resistance including brush resistance = 0.03 Ω, commutating field winding resistance = 0.011 Ω, series field resistance = 0.012 Ω, divertor resistance = 0.036 Ω. When the machine is delivering full load, calculate the voltage and power generated by the armature.**

Solution:

Power output = 300,000 W

Output current = 300,000/600

= 500 A

I_{sh} = 600/75 = 8 A,

I_a = 500 + 8 = 508 A

Since the series field resistance and divertor resistance are in parallel their combined resistance is

$$= \frac{0.012 \times 0.03}{0.042} = 0.009\,\Omega$$

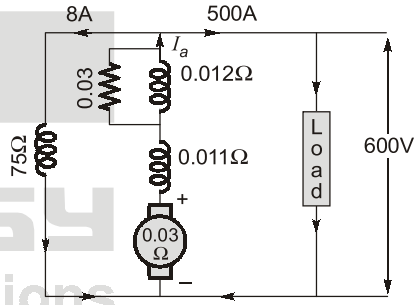

Total armature circuit resistance = 0.03 + 0.011 + 0.009

= 0.05 Ω

Voltage drop = 508×0.05

= 25.4 V

Voltage generated by armature = 600 + 25.4 = 625.4 V

Power generated = 625.4×508

= 317,700

Power generated in kW = 317.7 kW

Q.5 **A separately excited generator, when running at 1000 r.p.m. supplied 200 A at 125 V. What will be the load current when the speed drops to 800 r.p.m. if I_f is unchanged? Given brush drop = 2 V. Given armature resistance = 0.04 Ω**

Solution:

The load resistance R = 125/200 = 0.625 Ω, in figure.

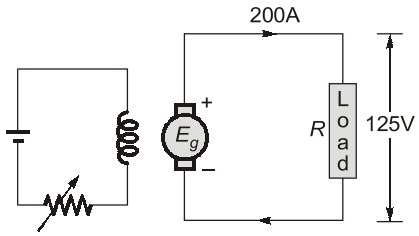

2 CHAPTER
Transformers

Q.1 A 250 kVA, 11000/415 V, 50 Hz, single phase transformer has 80 turns on the secondary. What will be the maximum core flux?

Solution:

Induced emf in secondary winding, $E_2 = 415$ V

Supply frequency, $f = 50$ Hz

Number of secondary turns, $N_2 = 80$

Maximum core flux, $\phi_{max} = \dfrac{E_2}{4.44 f N_2}$ $\quad \because E_2 = 4.44 f N_2 \phi_{max}$

$$= \frac{415}{4.44 \times 50 \times 80} = 0.02337 \text{ Wb or } 23.37 \text{ mWb}$$

Q.2 The emf per turn of a single phase 10 kVA, 2200/220 V, 50 Hz transformer is 10 V. Calculate (i) the number of primary and secondary turns, (ii) the net cross-sectional area of core for a maximum flux density of 1.5 T.

Solution:

EMF per turn = 10 V

Primary induced emf, $E_1 = V_1 = 2{,}200$ V

Secondary induced emf, $E_2 = V_2 = 220$ V

Supply frequency, $f = 50$ Hz

Maximum flux density, $B_{max} = 1.5$ T

(i) Number of primary turns, $N_1 = \dfrac{E_1}{\text{EMF per turn}} = \dfrac{2{,}200}{10} = 220$

Number of secondary turns, $N_2 = \dfrac{E_2}{\text{EMF per turn}} = \dfrac{220}{10} = 22$

Maximum value of flux, $\phi_{max} = \dfrac{\text{EMF per turn}}{4.44 f} = \dfrac{10}{4.44 \times 50} = 0.045$ Wb

(ii) Net cross-sectional area of core, $a = \dfrac{\phi_{max}}{B_{max}} = \dfrac{0.045}{1.5} = 0.03 \text{ m}^2$

Q.3 A single phase, 50 Hz, core type transformer has square cores of 20 cm side, permissible maximum flux density if 1 Wb/m^2. Calculate the number of turns per limb on the high and low voltage sides for a 3,000/220 V transformer.

Solution:

$$\text{Core Area} = 20 \times 20 = 400 \text{ cm}^2 = 0.04 \text{ m}^2$$

Permissible flux density, $B_{max} = 1.0 \text{ Wb/m}^2$

Maximum value of permissible flux,

$$\phi_{max} = B_{max} \times A = 1 \times 0.04 = 0.04 \text{ Wb}$$

Number of turns on low-voltage (secondary) winding,

$$N_2 = \frac{E_2}{4.44\, f\, \phi_{max}} = \frac{220}{4.44 \times 50 \times 0.04} = 24.77;\ 26 \text{ (say)}$$

Number of turns on high-voltage (primary) winding,

$$N_1 = \frac{E_1}{E_2} \times N_2 = \frac{3000}{220} \times 26 = 354$$

$$\text{No. of } hv \text{ turns on each limb} = \frac{354}{2} = 177$$

$$\text{No. of } lv \text{ turns on each limb} = \frac{26}{2} = 13$$

Note: LV turns are calculated first, rounded one figure off to the next higher even number in order that maximum flux density does not exceed the permissible maximum flux density. Then *hv* turns are calculated with corrected number of turns by transformation ratio. Further there are two limbs and each limb accommodates half of the *lv* and half of the *hv* turns from the view point of reducing leakage reactance.

Q.4 A single phase transformer has a core whose cross-sectional area is 150 cm^2; operates at a maximum flux density of 1.1 Wb/m^2 from a 50 Hz supply. If the secondary winding has 66 turns, determine the output in kVA when connected to a load of 4 Ω impedance. Neglect any voltage drop in the transformer.

Solution:

Peak value of flux density, $B_{max} = 1.1 \text{ Wb/m}^2$

Cross-sectional area of core, $a = 150 \text{ cm}^2 = 0.015 \text{ m}^2$

Maximum value of flux in the core,

$$\phi_{max} = B_{max} \times a = 1.1 \times 0.015 = 0.0165 \text{ Wb}$$

Number of turns on secondary,

$$N_2 = 66$$

Supply frequency, $f = 50 \text{ Hz}$

RMS value of induced emf in the secondary winding,

$$E_2 = 4.44\, f\, \phi_{max}\, N_2 = 4.44 \times 50 \times 0.0165 \times 66 = 240 \text{ volts}$$

Secondary Voltage, $V_2 = E_2 = 240 \text{ V}$ neglecting voltage drop in secondary winding

Secondary current, $I_2 = \dfrac{V_2}{\text{Load impedance}} = \dfrac{240}{4} = 60 \text{ A}$

$$\text{Output in kVA} = \frac{V_2 I_2}{1{,}000} = \frac{240 \times 60}{1000} = 14.4 \text{ kVA}$$

Q.5 A 100 kVA, 2400/240 V, 50 Hz single phase transformer has an exciting current of 0.64 A and a core loss of 700 W, when its high voltage side is energised at rated voltage and frequency. Calculate the components of no-load current and no-load branch parameters.

Solution:

Primary Voltage, $V_1 = 2{,}400 \text{ V}$

Exciting or no-load current, $I_0 = 0.64 \text{ A}$

Iron loss = 700 W

Iron loss current, $I_e = I_0 \cos\phi_0 = \dfrac{\text{Iron loss}}{V_1} = \dfrac{700}{2,400} = 0.292$ A

Magnetising component of no-load current,

$$I_m = \sqrt{I_0^2 - I_e^2} = \sqrt{(0.64)^2 - (0.292)^2} = 0.57 \text{ A}$$

No-load branch parameters, $R_0 = \dfrac{V_1}{I_e} = \dfrac{2,400}{0.292} = 8,220\ \Omega$ or $8.22\ \text{k}\Omega$

$$X_0 = \frac{V_1}{I_m} = \frac{2,400}{0.57} = 4,210\ \Omega \text{ or } 4.21\ \text{k}\Omega$$

Q.6 Draw and explain phasor diagram of transformer under loaded condition. A single phase 440/110 V transformer takes a no-load current of 4 A at 0.2 power factor. If the secondary supplies a current of 100 A at a power factor of 0.8 lagging determine (i) the current taken by the primary winding (ii) the magnetising reactance and resistance representing core losses.

Solution:

Primary emf, $E_1 = 440$ V

Secondary emf, $E_2 = 110$ V

No-load power factor, $\cos\phi_0 = 0.2$ (lag)

$$\sin\phi_0 = \sqrt{1 - 0.2^2} = 0.98$$

Secondary current, $I_2 = 100$ A

Load power factor, $\cos\phi_2 = 0.8$ (lag)

Transformation ratio, $K = \dfrac{V_2}{V_1} = \dfrac{110}{440} = \dfrac{1}{4}$

Primary counterbalancing current,

$$I_1 = K I_2 = \frac{1}{4} \times 100 = 25 \text{ A}$$

lagging behind the supply voltage V_1 by an angle ϕ_1' where $\phi_1' = \phi_2 = \cos^{-1} 0.8 = 36.87°$

No-load current, $I_0 = 4$ A lagging behind the supply voltage V_1 by an angle ϕ_0

$= \cos^{-1} 0.2 = 78.46°$

(i) Primary current,

$$I_1 = I_1' + I_0 = (I_1' \cos\phi_1' + I_0 \cos\phi_0) + j(I_1' \sin\phi_1' + I_0 \sin\phi_0)$$

$$= (25 \times 0.8 + 4 \times 0.2) + j(25 \times 0.6 + 4 \times 0.98)$$

$$= (20.8 + j\,18.92)\ A = 28.12 \angle 42.29°\text{A}$$

Iron loss component of no-load current,

$$I_e = I_0 \cos\phi_0 = 4 \times 0.2 = 0.8 \text{ A}$$

Magnetising component of no-load current,

$$I_m = I_0 \sin\phi_0 = 4 \times 0.98 = 3.92 \text{ A}$$

(ii) Resistance representing core losses,

$$R_0 = \frac{V_1}{I_e} = \frac{440}{0.8} = 550\ \Omega$$

Magnetising reactance, $X_0 = \dfrac{V_1}{I_m} = \dfrac{440}{3.92} = 112.25\ \Omega$